No. COMPONENTS IN ASSLY	OP1	OP2	OP3	OP4	OP5	OP6
1						

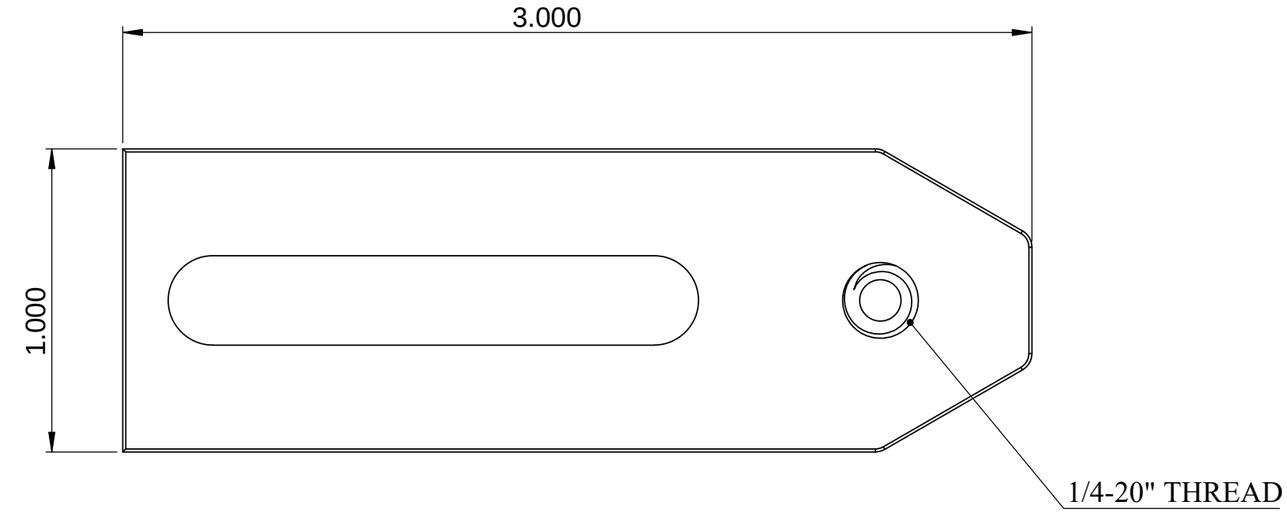

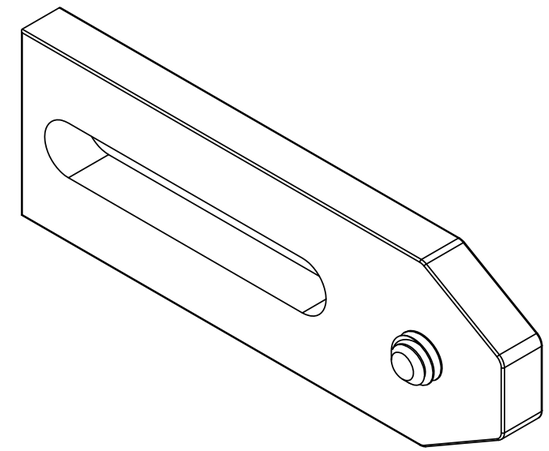

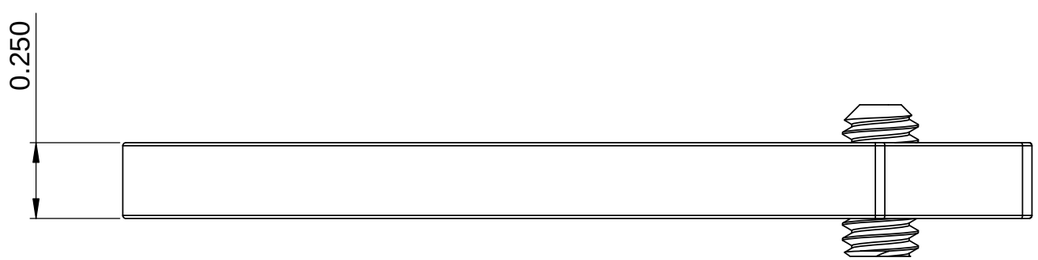

PrymeFix
fixturing solutions

155 PRAIRIE LAKE RD, SUITE A
EAST DUNDEE, IL 60118
847.428.7122

FILE NAME
SA1-PRY-STD-001

DIRECTORY
P:\Manufacturing\PrymeFix Product Line\SA Slide Arms\SA1 14-20 Slide Arms\

PROPRIETARY AND CONFIDENTIAL

THE INFORMATION CONTAINED IN THIS DRAWING IS THE SOLE PROPERTY OF PRYMETECH. ANY REPRODUCTION IN PART OR AS A WHOLE WITHOUT THE WRITTEN PERMISSION OF PRYMETECH IS PROHIBITED.

REVISION HISTORY	
1	
2	
3	
4	
5	
6	
7	

UNLESS OTHERWISE SPECIFIED

FRACTIONAL ± .003
ANGULAR: ± 1.0
TWO PLACE DECIMAL ± .010
THREE PLACE DECIMAL ± .003
FOUR PLACE DECIMAL ± .0005 (REAM)

HEAT TREAT **N/A**
MATERIAL **6061 Alloy**
FINISH **BLACK ANODIZED**

No Pcs to Complete Order:

INCH UNITS

DRAWN BY: **RD**
DATE **7/31/2014**

TITLE:
SA1-PRY-STD-001
1/4-20" LARGE SLIDE ARM

SIZE **B**
DWG. NO. SA1-PRY-STD-001 PRINTS
REV 0

SCALE: 2:1 | WEIGHT: 0.06 | SHEET 3 OF 3